Power and Electromagnetic Side-Channel Signals of Hardware Trojan Benchmarks

Rozhin Yasaei
University of California, Irvine
Irvine, U.S.A.
ryasaei@uci.edu

Sina Faezi
University of California, Irvine
Irvine, U.S.A.
sfaezi@uci.edu

Mohammad Abdullah Al Faruque
University of California, Irvine
Irvine, U.S.A.
alfaruqu@uci.edu

***Abstract*—Design and fabrication outsourcing has made integrated circuits vulnerable to malicious modifications by third parties known as hardware Trojan (HT). Over the last decade, the use of side-channel measurements for detecting the malicious manipulation of the chip has been extensively studied. However, the suggested approaches mostly suffer from two major limitations: reliance on trusted identical chip (e.i. golden chip); untraceable footprints of subtle hardware Trojans which remain inactive during the testing phase. To overcome these shortcomings, we propose a novel idea of maintaining a dynamic model of the integrated circuit throughout its life cycle for the purpose of detecting HT that might have been injected anywhere in the supply chain. In this paper, we gather a comprehensive dataset of power and Electromagnetic (EM) side-channel signals for hardware Trojan benchmarks from Trust Hub [4] benchmarks to develop a statistical model of the chip for HT detection. Two recent paper [1], [2] are published based on this dataset that provide further information on how to use the dataset to develop an HT detection model. Please cite the paper [2] when using any data from this dataset.**

I. Introduction

Given the growing demand for low-cost integrated circuits (IC), companies tend to use third-party IP cores and outsource the chip fabrication process to the foundries over the globe (Figure 1. The globalization of semiconductor industry has raised security concerns about intentional malicious modification of the original design, referred to as *Hardware Trojan* (HT). HT insertion has serious consequences such as leakage of sensitive information, denial of service, change of functionality, or performance degradation. One of the incidents that attracted the attention of the research community toward the threat of HT is the failure of Syrian radars in 2007. As a result of this failure, a suspected Syrian nuclear installation was bombed by Israel. Further investigation revealed that the commercial off-the-shelf microprocessors inside the radar were infected with HT, which was triggered through a hidden back door and disabled the system [**?**]. Due to the intricate nature and potential consequence of HTs, many researchers has been working on the countermeasures through various approaches.

Currently, in the literature, there has been various countermeasures proposed for HT detection, HT insertion prevention, or performing trustworthy computing on untrusted components. The first way to make sure the fabricated chip is genuine is reverse engineering. By delayering the IC, reconstructing the circuits structure and comparing it with the original design, one can make sure the IC is not modified by the foundry. However, it does not guarantee the detection of HTs inserted during design stage (pre-sillicon) and the cost to reverse engineering an IC is expensive and the chip will not be usable afterwards. To address this issue, lots works in the literature, including our approach, focus on observing side-channel signals for possible anomalous behavior due to existence of the HT in the system through life cycle of the chip.

Second, traditional non-destructive hardware Trojan detection techniques can be mainly divided into two categories, which are enhanced logic testing and side-channel analysis. The first approach tries to activate the HT by giving certain test vectors, capture the response of the device under test (DUT) and then determine if there is a HT. Side-channel analysis approaches control the operation condition of a DUT, measure the side-channel emission and then compare it with the one acquired from a golden chip. The need to a trusted golden chip for comparison is the main limitation of the side-channel analysis methods.

Since HTs can be designed to be dormant during post-manufacturing testing and only triggered by a rare condition during run time, they can easily escape these conventional HT countermeasures. First, during mass production, the usage of automatic test equipment is charged by the time. It would be prohibitively expensive to comprehensively test every condition on every IC in order to activate the HT when using logic testing approaches. Second, by using techniques like power gating [3], the circuit under test will not express any abnormal behavior and therefore cannot be detected using side-channel analysis. A possible solution would be randomly select some ICs from mass production and keep performing these HT detection techniques. However, an adversary in the foundry still can choose to insert the HT only in a small amount of chips therefore it has a little chance of being uncovered. As a result, a real-time monitoring mechanism becomes very important to ensure the integrity of an IC. In this paper, we measure the power and EM side-channel signals of a chip to develop a golden chip free HT detection model and data collection experiments are designed in a way to be used for run-time monitoring the chip and detecting the HT when it get triggered. Two recent paper [1], [2] are published based

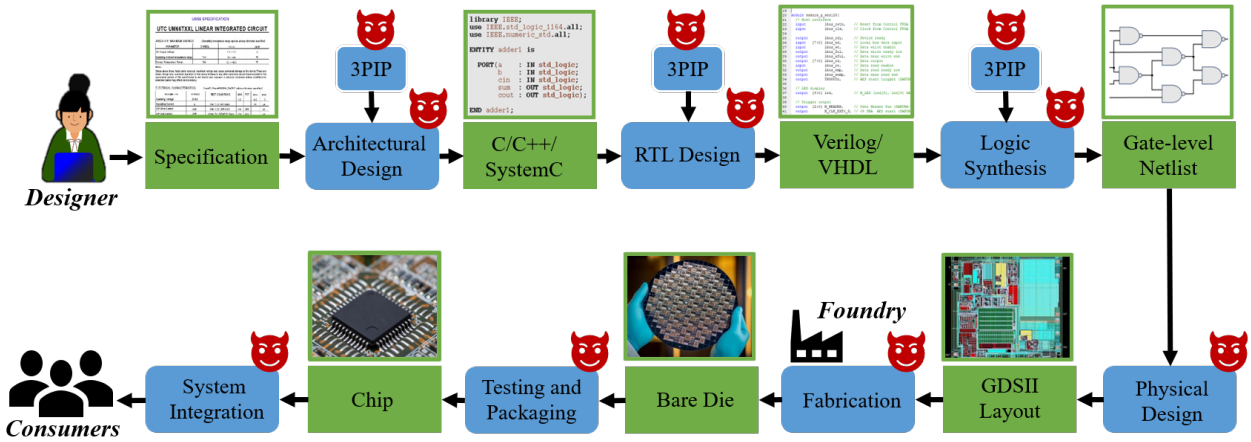

Fig. 1: IC supply chain which is vulnerable to HT insertion in any stage.

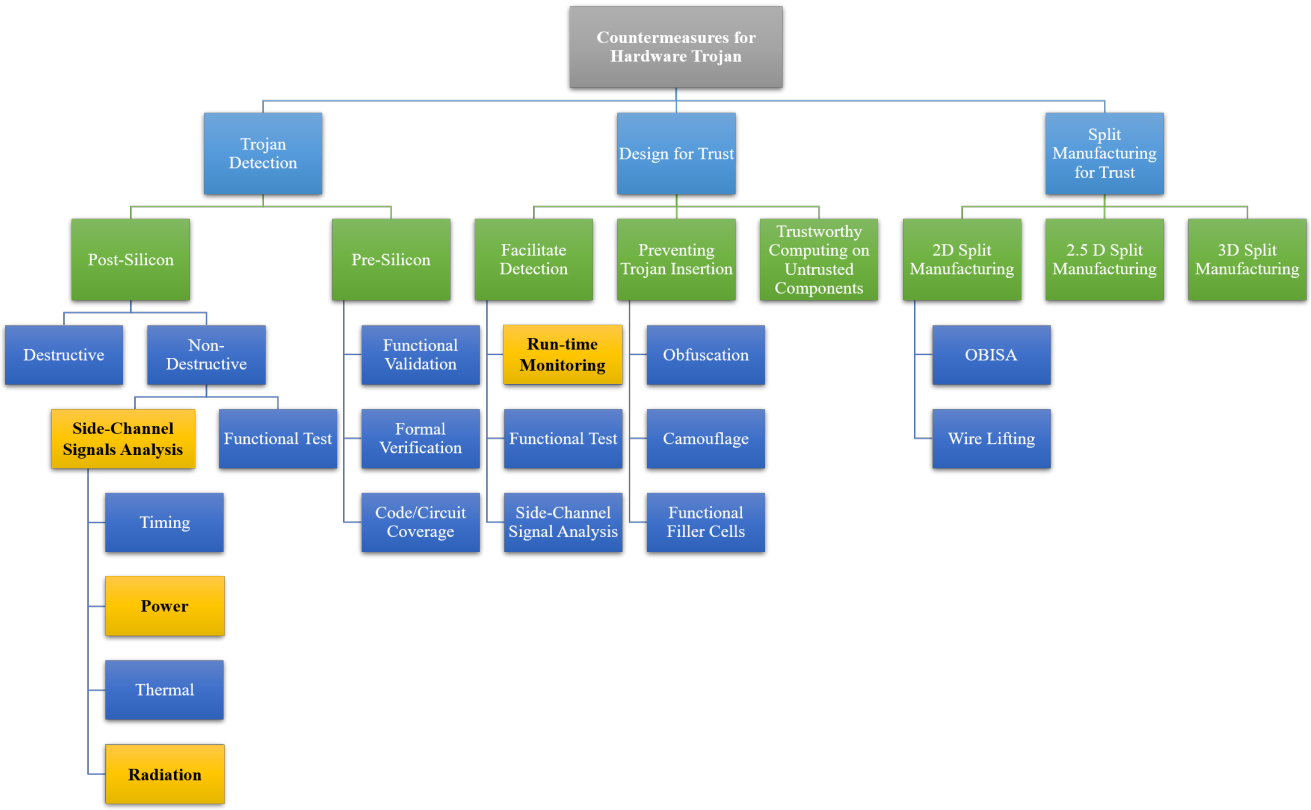

Fig. 2: Summary of existing defense mechanism for hardware Trojan

on this dataset that provide further information on how to use the dataset to develop an HT detection model.

II. Data Collection Condition

The data collection condition depends on several factors which are elaborated further. The factors and their possible values for each one is as follows:

1) Physical parameter (power consumption or EM radiation)
2) HT benchmarks (The 12 different benchmarks listed in Table I)
3) Trojan condition (disabled, enabled, or triggered)
4) Circuit input vector (fixed value or "next input=current output" method)
5) Chip external temperature (25°C, 35°C, 45°C, 55°C, 65°C, 75°C, and 85°C)

In each experiments, all these factors are set and under these condition, 10000 time-series signal is collected and individually stored in .csv format. As the main circuit under

TABLE I: Summary of HT benchmarks.

Benchmark	Trigger Condition	Payload
AES-T400	Getting a predefined number as input	Leaks the key through RF signal
AES-T500	Getting a predefined sequence of numbers as input	Drains the battery with a continuously rotating shift register
AES-T600	Getting a predefinednumber as input	Leaks the key by increasing the leakage current for each 0 bit in key
AES-T700	Getting a predefined number as input	Leaks the key as CDMA sequence code through a covert channel
AES-T800	Getting a predefined sequence of numbers as input	Leaks the key as CDMA sequence code through a covert channel
AES-T1000	Getting a predefined number as input	Leaks the key as CDMA sequence code through a covert channel
AES-T1100	Getting a predefined sequence of numbers as input	Leaks the key as CDMA sequence code through a covert channel
AES-T1300	Getting a predefined number as input	Leaks the key by increasing the dynamic power consumption
AES-T1400	Getting a predefined sequence of numbers as input	Leaks the key by increasing the dynamic power consumption
AES-T1600	Getting a predefined sequence of numbers as input	Leak the key through RF signal
AES-T1800	Getting a predefined number as input	Drains the battery with a continuously rotating shift register
AES-T2000	Getting a predefined sequence of inputs	Leaks the key by increasing the leakage current for each 0 bit in key

test is AES, the data collection is synchronized with AES encryption cycles. Thus, each time-series data represents the emissions from ship in the time interval between passing the input vector to AES and receiving the encryption output.

A. Hardware Trojan Benchmarks

Hardware Trojan is a malicious circuit that is inserted intentionally into a target circuit in order to degrade performance, leak sensitive information, deny the service, or change the functionality of chip. The Trojan circuit consists of two major part; payload and trigger. Payload is the part of Trojan that define its functionality and performs the malicious activity. Due to stealthy nature of Trojans, the payload is often inactive to evade the detection during testing and verification stages. The trigger is the optional circuit that monitors various signals or events in the base circuit and activates the payload when a specific signal or event is observed.

In this dataset, we measure the power and EM side-channel signals of HT benchmarks derived from Trust Hub [4]. The list of our HT benchmarks with their payload and trigger types are summarized in the Table I. All the HTs target an encryption core circuit, AES 128bits. The AES circuits receives a 128 bits input value (plain text), encrypts it using a secret key and generates a 128 bits output (cipher text). The key is the sensitive information in this design which the security of encryption depends on keeping the key secret.

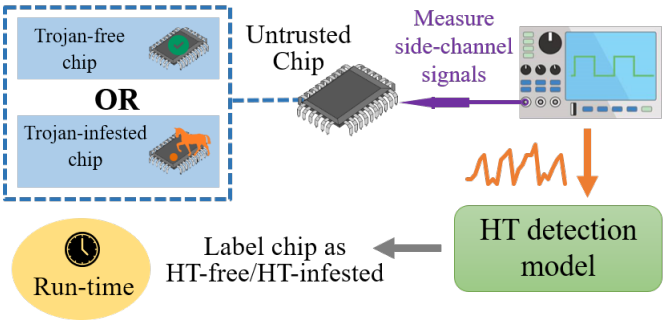

Fig. 3: The proposed pipeline to detect HT when it gets triggered in run-time.

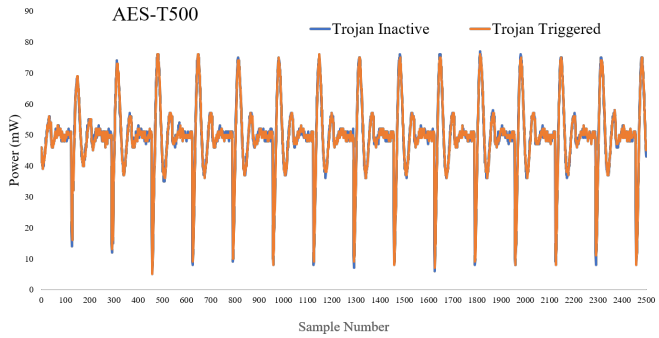

Fig. 4: A example of the power side-channel time-series signal for AES-T500 benchmark.

B. Trojan condition

An inactive HT does not alter the chip's functionality and hardly affect the side-channel profile of chip. As a consequence, its detection is very challenging in the testing stage due to the low probability of activating it with the limited numbers of test vectors. Therefore, we push the detection process to the run-time when it is possible to detect the Trojan as soon as it gets triggered and injects anomalies to the side-channel measurements of chip as depicted in Figure 3. Two recent paper [1], [2] are published based on this dataset that provide further information on how to develop a run-time monitoring HT detection model. An example of power side-channel for AES-T500 HT benchmark in the cases of inactive and active Trojans is depicted in Figure 4 which illustrates the anomalous HT activation effect on side-channel signals.

In order to develop this run-time monitoring model to detect Trojan, we gather a comprehensive dataset of power and EM radiation side-channel signals for hardware Trojan benchmarks. We measure the side-channel signals in three conditions:

- Trojan Disabled: The DUT includes both the main circuit and Trojan, but the trigger part of HT is disabled and it cannot be triggered. Thus, the collected side-channel signals includes the emission from both main circuit and the inactive HT.

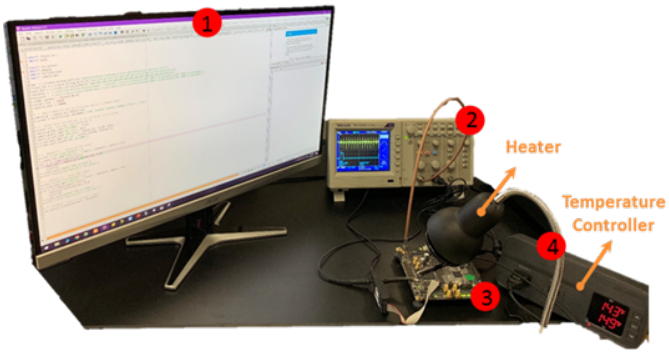

Fig. 5: Our experimental setup for power side-channel data collection.

- Trojan Enabled: The DUT includes both the main circuit and Trojan and the trigger part of HT is enabled and it can be triggered. Thus, the collected side-channel signals includes the emission from both main circuit and the HT which can be active or inactive.
- Trojan Triggered: The DUT includes both the main circuit and Trojan and the trigger part of HT is not only enabled but also it is activated by applying its trigger condition. Thus, the collected side-channel signals includes the emission from both main circuit and the active HT.

C. Input Vector

The main circuit in our experiment is the AES core that performs encryption on a 128 bits input vector. The input vector affect the switching in the circuit and alter the side-channel measurements. In each data collection experiment, the encryption process is repeated for 10000 times which leads to generating 10000 time-series signal. Therefore, we send 10000 input vectors to AES iteratively for each experiment which are generated in two way. The first method is to always send a fixed value as input to AES in which the measurement are not influenced by variation in switching activity. The other way is to send various sequences to the AES which infuses some variation to the measurements. In order to generate different input vector, we use the "next input=current output" method in which set the initial input vector as zero and the input for the next encryption cycle is the output of current cycle. Thus, instead of a fixed input vector, we generate a fixed sequence of varied input vectors. The directory of data samples collected using the "next input=current output" method have "$_1$" suffix and for fixed value method, it has "$_2$" suffix.

D. Chip External Temperature

Another variable in this data collection is the temperature because it is high affect the power and EM emission of the chip. In order to analyze the temperature effect which mimics the circuit againg phenomena as well, our experimental setup embeds a heater, temperature sensor, and temperature controller and we measure the signals under 7 different temperatures including 25°C, 35°C, 45°C, 55°C, 65°C, 75°C, and 85°C.

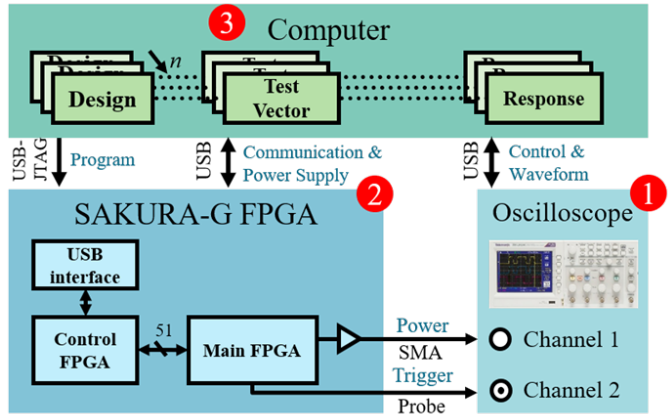

Fig. 6: The automated power analysis testbed architecture.

III. Automated Experimental Setup

In this section, we describe our automated testbeds for power and EM side-channel data collection.

A. Automated Power Side-Channel data collection

To speed up the data collection process, we have implemented an automated FPGA testbed. Since variables of the data collection are numerous, it is impossible for people to repeatedly program different design, apply corresponding test vectors, tune the oscilloscope to have steady waveform-of-interest displayed, transfer the measured power data to PC and post-process the data. The automated testbed, as shown in Figure 6 and Figure 5, comprises four major components:

1) Test control program on computer
2) Oscilloscope
3) SAKURA-G FPGA board
4) Temperature Controller

The test control program runs on a desktop computer and consists of three modules and a job queue. The job queue is a series of test to be conducted, which includes the design-under-test (DUT) in bitstream format, a test configuration, and the name of the response waveform file, which will later be captured and saved. The test control program dispatches a test job from the job queue and uses the three

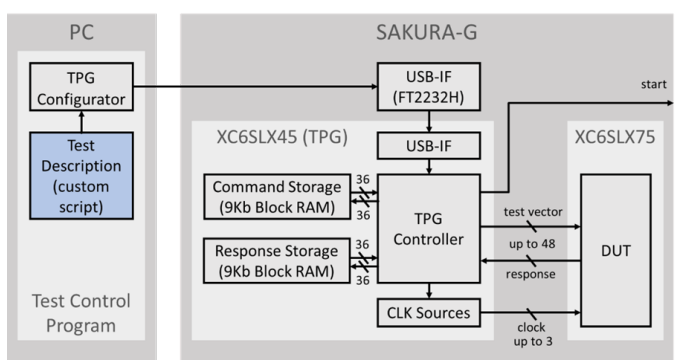

Fig. 7: Test Program Generator (TPG) architecture.

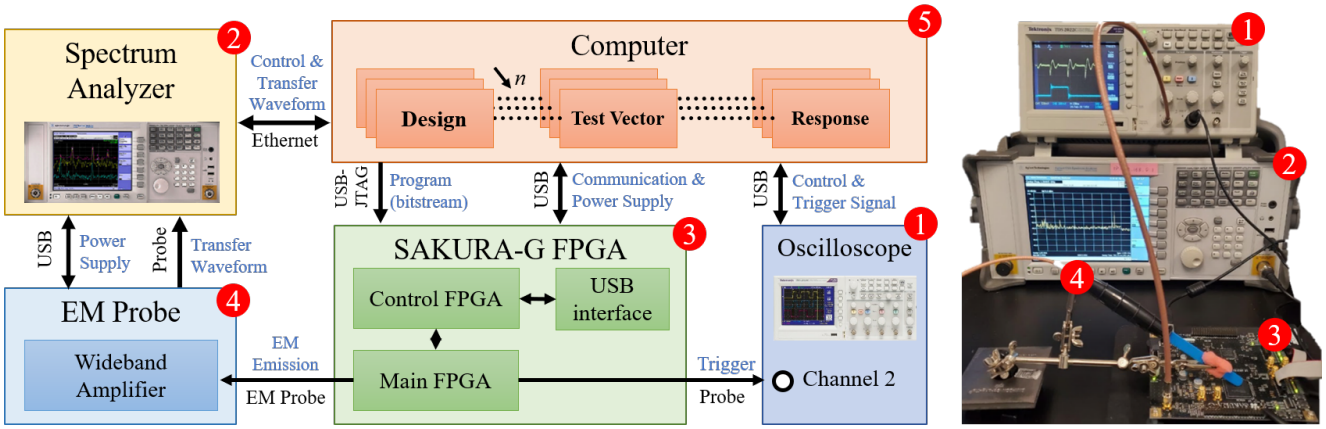

Fig. 8: Our experimental setup for EM side-channel data collection.

modules to complete the test. First, it uses the programmer module to program the design bitstream into the main FPGA (XC6SLX75) via a USB-JTAG cable. At the same time, it uses the test configurator to transfer the description file to the secondary FPGA (XC6SLX45), which serves as the test pattern generator (TPG), which is shown in Figure 7. The test description file specifies the connection of the two FPGA and the test vector the TPG will generate. After the test start, the TPG on the secondary FPGA will send a start signal, which will be used by the oscilloscope as a trigger to capture the waveform. The oscilloscope controller uses the test duration in the test description file to adjust the oscilloscope to have steady waveform displayed, and then save the waveform to the controlling PC. The temperature controller consists of a temperature sensor which is attached to the chip, a heater, and a controller to keep the temperature in the desired range.

B. Automated EM Side-Channel data collection

Similar to automated power analysis testbed, we create an automated testbed to measure the Electromagnetic side-channel of the circuit. In this testbed, the test program generator architecture is the same as the power testbed, but the data collection equipment differs. The automated testbed, as shown in Figure 8, comprises five major components:

1) Oscilloscope
2) Spectrum Analyzer
3) SAKURA-G FPGA board
4) EM probe
5) Test control program on the computer
6) Temperature controller

The desktop computer is connected to the Sakura-G FPGA board through JATG cable for programming, as well as a USB cable for communication and supplying the power of the board. The test program the FPGA and implement the target circuit design automatically. Then, it starts the data collection process by sending the input waveforms to the circuit input and receiving the output. The target circuit for our current benchmarks is the AES circuit, which outputs the encrypted version of the input signal. When on encrypted starts, the oscilloscope captures a trigger signal which is used for synchronization purposes. The computer is connected to the oscilloscope through a USB cable. When the oscilloscope captures the trigger signal, it means the encryption is started, and it transmits it to the computer program to start the EM data collection. EM emissions of FPGA are measured by an EM probe, which includes an amplifier. It sends the amplified signal to a spectrum analyzer for further analysis. The spectrum analyzer is connected to the computer through an Ethernet cable, and it starts the data collection when the encryption process starts, and the computer receives the trigger signal. The spectrum analyzer captures the EM signal, saves the waveform in the frequency domain, and sends it to the computer.

IV. Acknowledgment

This research was supported by the Office of Naval Research (ONR), award number N00014-17-1-2499. Any opinions, findings, and conclusions or recommendations expressed in this material are those of the authors and do not necessarily reflect views of the funding agency.

Please cite the paper [2] when using any data from this dataset.

References

[1] S. Faezi, R. Yasaei, and M. Al Faruque, "Htnet: Transfer learning for golden chip-free hardware trojan detection," *IEEE/ACM Design Automation and Test in Europe Conference (DATE'21)*, 2021.

[2] S. Faezi, R. Yasaei, A. Barua, and M. Al Faruque, "Brain-inspired golden chip free hardware trojan detection," *IEEE Transaction on Information Forensics and Security (IEEE TIFS'21)*, 2021.

[3] S. Narasimhan, D. Du, R. S. Chakraborty, S. Paul, F. G. Wolff, C. A. Papachristou, K. Roy, and S. Bhunia, "Hardware trojan detection by multiple-parameter side-channel analysis," *IEEE Transactions on computers*, vol. 62, no. 11, pp. 2183–2195, 2013.

[4] M. Tehranipoor, R. Karri, F. Koushanfar, and M. Potkonjak, "Trusthub," *Available on-line: https://www. trust-hub. org*, 2016.